RoHS

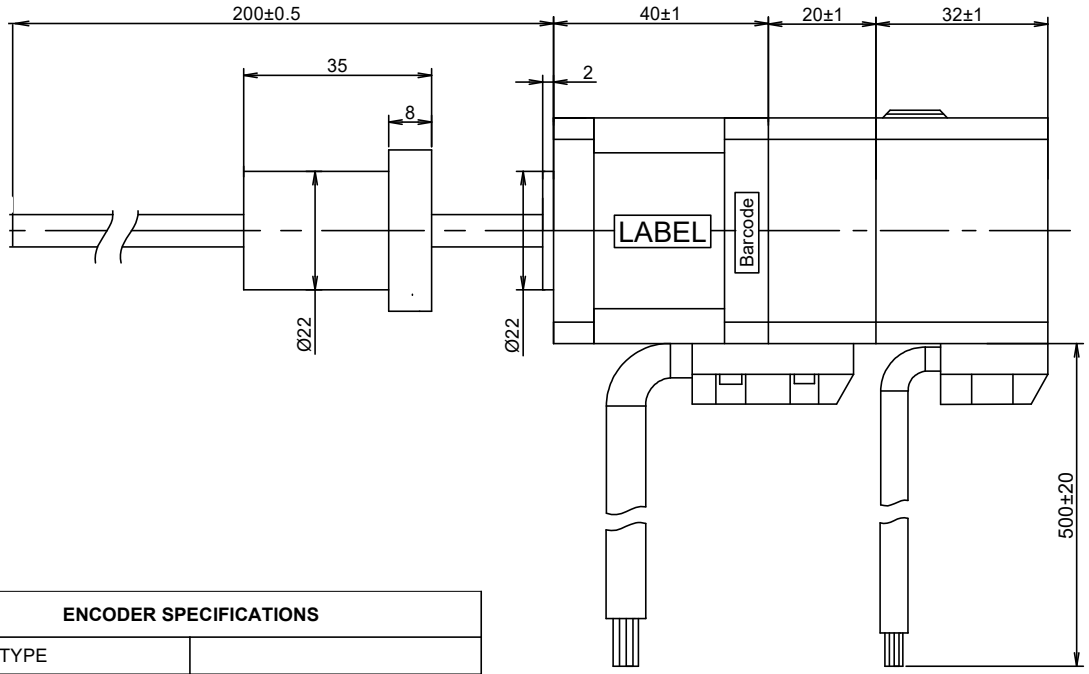

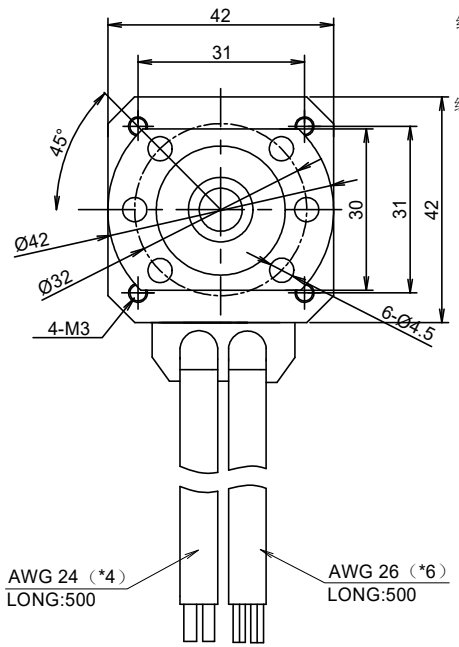

接线图 WINDING DIAGRAM

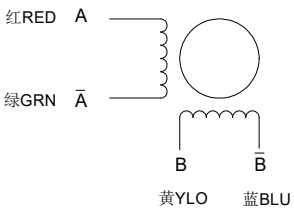

励磁顺序（两相励磁）VS旋转方向

EXCITING SEQUENCE(TWO PHASES) VS.DIRECTION OF ROTATION

STEP	A	B	Ā	B̄
1	+	+	−	−
2	−	+	+	−
3	−	−	+	+
4	+	−	−	+

CW ↓ ↑ CCW

从电机安装面看为顺时针

CLOCK WISE VIEW FROM MOUNTING SIDE

ENCODER SPECIFICATIONS	
ENCODER TYPE	
POWER SUPPLY	5V
RESOLUTION	1000CPR
OUTPUT TYPE	Line Driver
电机参数 MOTOR SPECIFICATIONS	
步进角 STEP ANGLE	1.8°±5%
额定电流RATED CURRENT	2.0 Amps/PHASE
保持力矩 HOLDING TORQUE	0.4N.m
电阻 RESISTANCE	1.5 ohm±10% AT 25°C
电感 INDUCTANCE	2.8 mH±20% AT 1kHz,1Vrms
转子惯量 ROTOR INERTIA	
绝缘等级 INSULATION CLASS	CLASS B
绝缘耐压 DIELECTRIC STRENGTH	500V A.C 1MINUTE
绝缘电阻 INSULATION RESISTANCE	100MΩ@500VDC
螺纹导程 LEAD	4mm
丝杆直径LEAD SCREW DIAMETER	12mm
整步步长LINEAR TRAVER PER STEP	0.02mm
环境温度OPERATING TEMPERATURE	-20℃~+50℃
温升 Heat Rise	80K

编码器定义（1000线）		
1	白	+5VCC
2	黑	EGED
3	绿	EA-
4	红	EA+
5	蓝	EB-
6	黄	EB+

YYWWXXXXX

Stator barcode label

www.czaiwei.com

电机型号 MOTOR CODE

EW17-320M-B04200-E1000

步进电机规格书

UNIT: mm

未标注长度及角度默认公差

UNLESS OTHERWISE SPECIFIED TOLERANCES

长度/DIMENSIONS：±0.3mm 角度/DEGREES：±5%

电机检验标准/Motor inspection standard: QC-ZL-011

REV.	DATE	REVISIONS	BY
A	08-05-23	first version	CAROL

APPROVED

John